

S5863-24X2C

L3 Managed Ethernet Switch

Product Overview

The S5863-24X2C is a Layer 3 switch with high-performance capabilities, offering full 10G access, 40G, and 100G uplink core routing. It is designed to meet the high-density and high-bandwidth requirements of next-generation enterprise networks, data centers, and metropolitan area networks. Additionally, it serves the needs of telecom network operators and can function at the aggregation or access layer of campus Ethernet networks. This device can also be used as a connection layer in data centers.

The S5863-24X2C switch features a comprehensive set of services, including Layer 2, Layer 3, MPLS, VXLAN, OAM/APS, and more, along with support for security, flow control, hardware-based NetFlow, and high-precision clock capabilities. The product includes an elastic stacking function, which allows multiple devices to be virtualized into a single logical entity. This not only facilitates the expansion of ports and switching capacity but also enables unified management, upgrades, and maintenance across devices.

To address the demands of large data traffic and non-blocking transmission in data centers, this switch provides robust caching capabilities and an advanced cache scheduling mechanism to maximize effective use of device cache capacity. It is tailored to meet the needs of high-density and high-bandwidth network applications in next-generation enterprise networks, data centers, and metropolitan area networks. The switch is versatile enough for use in network operator environments, campus Ethernet aggregation or access layers, data center access layers, and even as a core layer in small to medium-sized enterprises, offering comprehensive server access solutions for data centers.

Device Brief Information



S5863-24X2C

- 24*1000M Base-X SFP/10GE SFP+
- 2*40G QSFP ports/2*100G QSFP28
- 1+1 modular redundant power supply
- Two modular Fans
- Size: 440×320×44mm 19” Rack-mount
- AC: 100～240V; 47/63Hz

Key Features

Equipment Stability

- Support IPv4/IPv6 dual protocol stack platform based on Linux operating system
- Support multiple link redundancy and network redundancy protocols such as STP / RSTP / MSTP / ERPS / LACP

Carrier-level equipment stability

- Based on Linux operating system, support IPv4/IPv6 dual protocol stack platform
- Support multiple link redundancy and network redundancy protocols such as STP/RSTP/MSTP/ERPS/LACP

Stackable

- Support Combine the processing power of multiple switches into a single logical device.
- Support When a switch in the stack system fails, traffic can be automatically switched to other switches, network availability and redundancy.
- Support Stacking simplifies the management process. Administrators only need to manage one logical device.

Perfect safety mechanism

- Support ACL security filtering mechanism, which can provide security control functions based on MAC, IP, L4 port
- Support ARP attack automatic protection and user blocking functions
- Support DHCP attack automatic protection based on Mac Address and user blocking functions
- Support DHCP-snooping/IP-source-Guard/802.1X and other security features
- Support link protection functions such as BFD, FlexLink, LACP
- Support remote loop detection function
- Support remote user authentication based on Tacacs+, Radius, and Local user authentication

Powerful QoS capabilities

- Support port speed and flow speed limit function
- Support classification based on service flow and Qos flow control function
- Support queue scheduling algorithms such as SP/WRR/SP+WRR
- Support port-based and service flow-based mirroring functions

Enhanced multi-service capabilities

- Support DHCP Server and DHCP Relay

Rich routing protocol

- Support static route
- Support dynamic route such as RIP, OSPF, BGP,
- Support IPV4/IPV6 dual protocol stack, support RIPng、OSPFv3

Simple and easy-to-use network management function

- Support CLI based on RS232 serial port, Telnet and SSHv2
- Support WEB-based configure operation management, support SNMP V1/V2/V3
- Support remote upgrade or equipment through FTP and TFTP

Hardware Specifications

Attributes	S5863-24X2C
Port	24*1000M Base-X SFP/10GE SFP+, 2*40G /100G QSFP28
Exchange Capacity	880Gbps
Packet Forwarding Rate	595.24Mpps
Memory and Storage	Memory: 1GB; Storage: 8GB
MAC Address	32K
Packet Buffer	72Mbit
Power	AC: 100～240V; 47/63Hz DC: -40~-60V
Power Consumption	Idle ≤33W Full load: ≤60W
Weight	≤8.6kg (AC+AC)

Dimensions (W*H* D)	440×390×44 (mm*mm*mm)
Environment	Working Temperature：-10℃～55℃ Storge temperature：-40℃～70℃ Relative Humidity: 5%~95%, non-condensing

Panel view

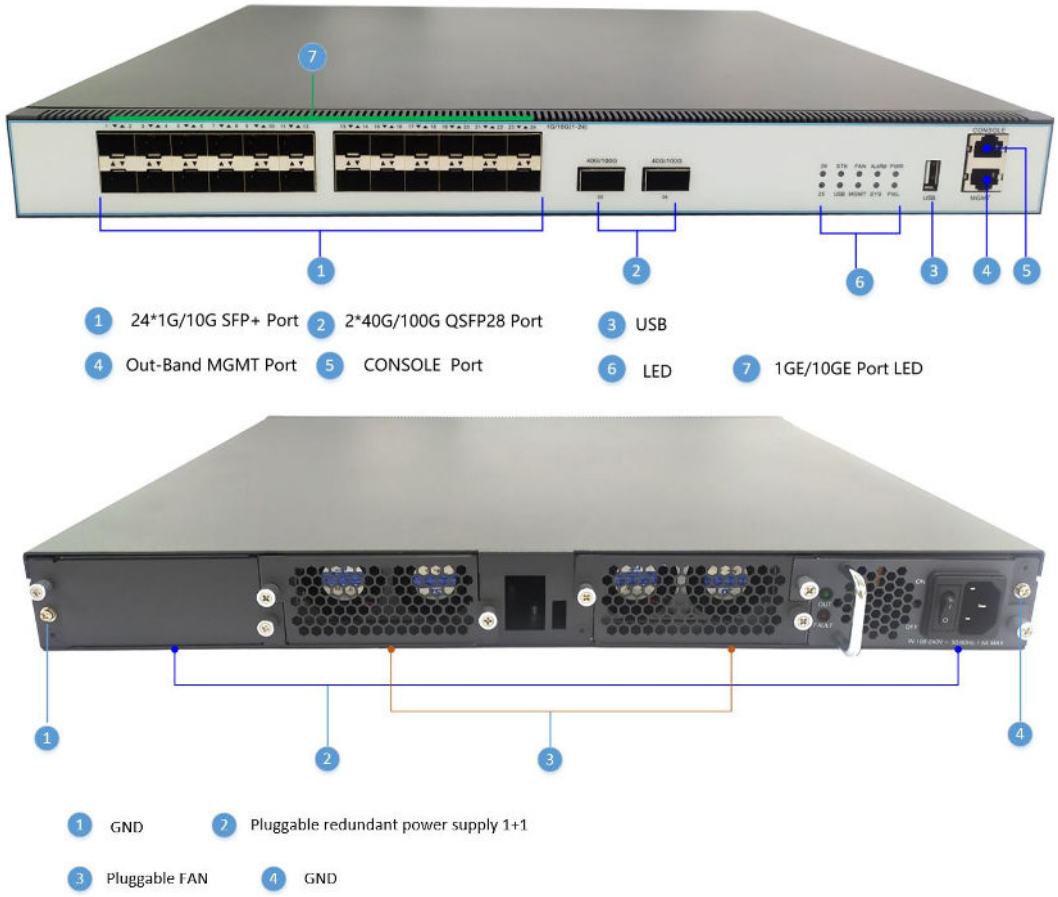

Label	Connector Type	Connector Description
40G/100G 1-2	QSFP28	Connect to external uplink equipment
1G/10GE 1-24	SFP+	Connect to external uplink equipment
USB	USB2.0/3.2	Connecting peripherals for uploading and downloading configuration
CONSOLE	RJ45	The software debug port
MGMT	RJ45	The out-band management port

LED indicator

LEDs/Buttons	Color	Function	Description	
PWR	Green	Power status	ON	The AC/DC power module is normal.(right)
			OFF	The AC/DC power module faulty or unavailable
PWL	Green	Power status	ON	The AC/DC power module is normal.(left)
			OFF	The AC/DC power module faulty or unavailable

LEDs/Buttons	Color	Function	Description	
ALARM	Red	Port status	ON	Critical alarms are reported for the card.
			OFF	No critical alarm is reported for the card.
SYS	Green	System running status	Green OFF	The device is not running or power off.
			Green Flash	The device is running normally.
FAN	Green	Fan running status	ON	FAN is running normally.
			OFF	FAN is running abnormally.
MGMT	Green	Port status	ON	The link is properly connected (link up) and in action
			OFF	The link is interrupted (link down).
STK	Green	Port status	ON	Enable Stack
			OFF	Disable Stack
USB	Green	Power status	ON	Insert flash (Fat32)
			OFF	NO Insert flash (Fat32)
26	Green	port status	ON	The link is properly connected (link up) and action
			OFF	The link is interrupted (link down).
25	Green	Port status	ON	The link is properly connected (link up) and action
			OFF	The link is interrupted (link down).
1G/10G Port	Green	Port status	ON	The link is properly connected (link up) and action
			OFF	The link is interrupted (link down).

Plug-In Units

Power Supply Unit (PSU)

On the rear panel of the switch, there are two slots for Power Supply Unit (PSU). The mounting slots can be equipped with DC or AC type PSUs. The different type of PSUs can be equipped into the switch. The below shows AC and DC type of power supply modules Two PSUs, For supplying redundancy, dual PSUs have to be installed at a system.

The power supply unit (PSU) feeds the proper power voltage to the base board of switch. Two PSUs are possible to be mounted into rear side of the chassis and it can be DC or AC type of PSU. Therefore, you need to decide to choose proper power supply unit according to installation environment.

The power connector (AC and DC type) for main power supply is located on the rear panel of the PSU. For redundant power feeding, the second PSU has to be used.
The below shows the electrical characteristics of the switch:

Characteristic	S5863-24X2C
Nominal AC/DC power supply	AC: 100 ~ 240V; 47/63Hz DC: 36-75V
AC Rated power of power supply	100W
DC Rated power of power supply	100W



FAN Unit

The switch provides 2 fan unit slots on the rear panel. This plug-in unit internally consists of 2 fans. User can insert fan unit to a fan slot by slowly adjusting them to fit into the slot guid-ance. The air flows from the front side inlet to the rear side outlet.



Characteristic	S5863-24X2C
FAN	8000 RPM adjustable fan

Power Supply Equipment

S5863 has the following power supply equipment:

- Support both -48V DC and 100V AC/220V AC power input.
- Provide over-current and over-voltage protection and noise filtering for DC power input.

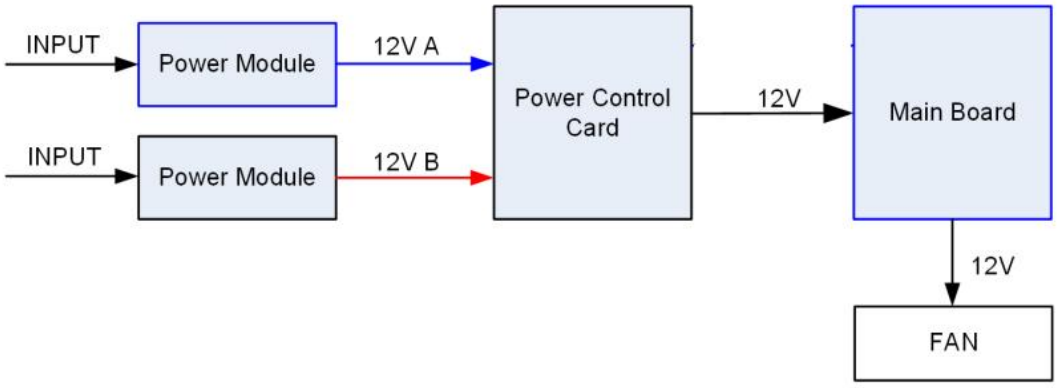

Software Specifications

Attributes	S5863-24X2C
VLAN	Support 4K VLAN

	Support VLAN based on port, MAC and protocol Support dual Tag VLAN, Access/Trunk/Hybrid
Ethernet	Ethernet interface operating modes Ethernet interface operating rates Jumbo Frame Port enable/disable Port based storm-control Unknow-unicast/unknow-multicast/broadcast storm-control Port-isolate
Stackable	Support Sacking of 8 units through a single ip address. Support Unified management. Support Redundancy mechanism. Support High speed interconnect.
VXLAN	Support VXLAN uses MAC in UDP encapsulation Support VMS can move between different Layer 2 network domains. Support VNI is used to isolate different virtual networks to ensure that network traffic of different tenants is isolated . Support Enable virtual machine packets to communicate across different subnets and data centers;
MAC	Support static MAC address setting Support black hole MAC address filtering Support port MAC address limit Automatic learning and aging of MAC addresses
ARP	Static and dynamic ARP entries Aging of ARP entries ARP-Proxy
Port Control	Support two-way bandwidth control Support port storm suppression Support 9K Jumbo ultra-long frame forwarding
Port Aggregation	Support static link aggregation Support dynamic LACP Each aggregation group supports a maximum of 8 ports LAG load balance（SIP/DIP/SMAC/DMAC）
Mirroring	Supports multi-port mirroring analysis Service flow-based image analysis
ACL	Support standard and extended ACL Support ACL policy based on time period Provide MAC, IP, L4 port and port level security control functions
QoS	Traffic classification based on COS/DSCP (simple classification) Traffic classification based on ACL (complex classification) Traffic classification based on inner header of the tunnel packets Queue scheduling Remark the priority fields (COS/DSCP) of the packet based on ACL Flow redirection Flow mirror Traffic policing based on direction(in/out) of Port Traffic policing based on direction(in/out) of VLAN

	Traffic policing based on direction(in/out) of flow Traffic policing based on direction(in/out) of aggregated flow SP（Strict Priority）scheduling WRR（Weighted Round Robin）scheduling SP + WRR mixed scheduling
Safety	Support user hierarchical management and password protection Support IEEE 802.1X authentication Support Radius & TACACS+ authentication Support MAC address learning limit, support black hole MAC function Support port isolation Support broadcast message rate suppression Support IP Source Guard Support ARP flood suppression and ARP spoofing protection
Layer 3	Support ARP learning and aging Support IPv4/IPv6 static route Support dynamic route RIP/OSPF/BGP Support IPv4/IPv6 dual-stack platform Support VRRP、CLI、Telnet、WEB、SNMP V1/V2/V3、SSHv2 mode
Terminal Services	Configurations through CLI Console Terminal service
Maintenance	Per-module Debug features CPU usage display and alarm Memory usage display and alarm Device temperature、PSU、FAN、status display and alarm User operation logs Management of logs, alarms, and debugging information Detailed Diagnostic-information collection Manual /Schedule reboot Reboot Information logging Ping IPv6 Ping Traceroute Port/Flow/Remote mirror To CPU/From CPU packets statistics Time configuration Timezone
System Security	SSHv1/v2 RADIUS TACACS+ Authentication Accounting Port based dot1x MAC based dot1x MAC/IP ACL Port/VLAN/L4-Port ACL IP Source Guard Limitation on MAC address learning on interface Rate limit CPU Traffic Limit

	CLI/WEB/SNMP/Telnet/SSH filtering
Spanning-Tree	Rapid Spanning-Tree Protocol Multi-instance Spanning-Tree Protocol
Network Management	DHCP Server DHCP Relay DHCP Snooping DHCP Option60 DHCP Option82 DHCP Option66 DHCP Option120 SNTP Simple Network Time Protocol) LLDP
Configuration Management	Inband management interface and configuration Outband management interface and configuration Privileged user priority and privileged commands Network management based on SNMPv1/v2c/v3 Public and private MIB Public and private Trap Configuration and management based on WEB Restore factory default configuration
File system	Upload and download files through FTP or TFTP Upload and download files through Xmodem
System Management	Support FTP, TFTP file upload and download Support SNTP Support LLDP neighbor device discovery protocol Support RFC1213 SNMP network management Support Ping and Traceroute Supports configuration management based on WEB pages
Upgrade	Upgrade with the local image file Upgrade with the remote TFTP server Online upgrade Uboot

Purchase Info

Product Name	Product Description
S5863-24X2C	24*1000M Base-X SFP/10GE SFP+, 2*40G/100G QSFP28