LNK-IMC408M Series

Managed Industrial Ethernet Switch

This quick start guide describes how to install and use the Hardened Gigabit Ethernet Switch. It is the injector of choice for harsh environments.

Overview

LNK-IMC408M Series is the L2+ managed 8-port 10/100/1000Base-T (802.3at PoE) + 4-port 1000Base-X SFP hardened Ethernet switch. The Switch has 8 Gigabit Ethernet ports and 4 SFP fiber ports. TP (RJ45) supports 10/100/1000Base-T(X), Full/Half duplex mode, and auto MDI/MDI-X connection; 1000Base-X supports 1 or 2 core Single-mode or Multi-mode fiber. With its reliable design and ease of use, the product is a great choice for integrating networks consisting of network devices such as IP cameras and wireless access points between remote locations.

General

To ensure trouble free transportation and storage, all products must be thoroughly inspected, tested and well packed before delivery. Check the product upon receipt for any visible damage which may have been caused during shipping.

Package Content

- LNK-IMC408M Switch x 1
- Quick Start Guide x 1

Features

- ► Support 8x10/100/1000Base-T + 4x1000Base-X SFP
- ► 10/100/1000Mbps RJ45 Port supports Full/Half-duplex, Auto-negotiation, Auto MDI/MDIX
- ► IEEE802.3af/at compliant
- ► DIP Switch supports one-key Ring Management
- ► Support connecting USB-C port for easy management, without the need to access the RS232 serial port at all
- ► 9K Bytes Jumbo Frame
- ► IEEE 802.3az Energy Efficient Ethernet (EEE)
- ► IP40 Aluminum Case
- ► Supports DIN-Rail installation
- ► -40°C to 80°C (-40°F to 176°F) operating temperature

Technical Structure and Port Description

Front View

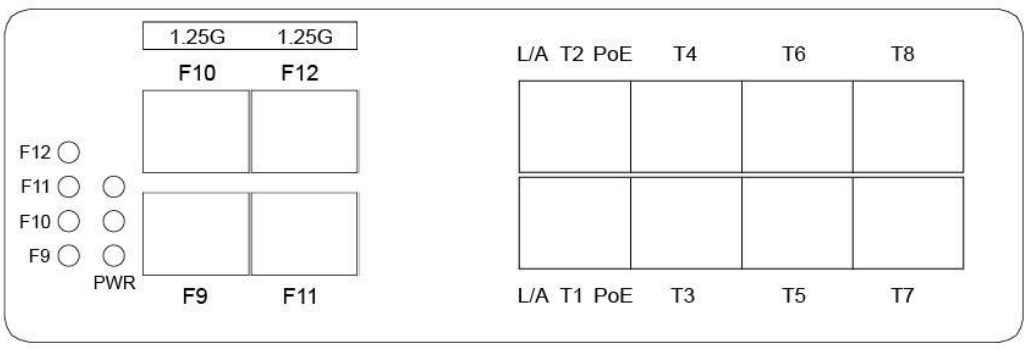

T1~T8: 10/100/1000Mbps Ethernet (PoE) Port

F9~F12: Gigabit SFP Optical Port

Rear View

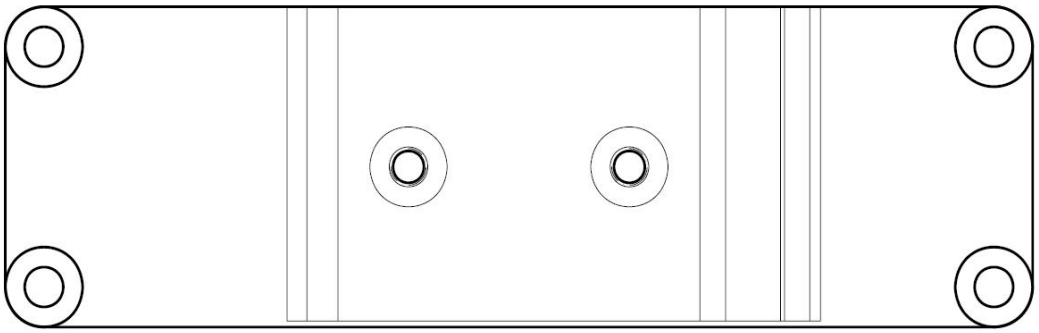

Top View

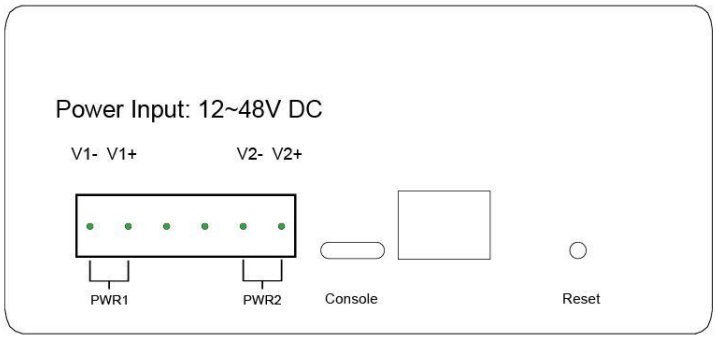

Power Industrial Terminals: 12 ~48VDC(48~57V when PoE in use), dual redundancy, please use AC110~245V, 50/60Hz power supply.

Setup

a) Connect the RJ45 port of the Switch to Network the device with a network cable.
b) Plug in the 1.25G SFP module and insert the LC connector of Patch cord in to the LC port of SFP transceiver.
c) After the device is powered on, the PWR indicator will all be on. If the indicators are not on, check the power supply connection.
d) After all cables are correctly connected, check the indicators status and do trouble shooting accordingly.

Technical Indexes

Ethernet	
Standards:	IEEE802.3 10BASE-T
	IEEE802.3u 100BASE-TX
	IEEE802.3ab 1000BASE-T
	IEEE802.3z 1000BASE-X
	IEEE802.3p QoS
	IEEE802.1d Spanning Tree
Forward & Filtering Rate:	14,880pps (10Mbps)
	148,800pps (100Mbps)
	1,488,000pps (1000Mbps)
Packet Buffer Memory:	12M bits
Processing Type:	Store-and-Forward
Backplane bandwidth	26Gbps
Max Packet Length:	9K Bytes Jumbo Frame
Address Table Size:	8K MAC Addresses

Interface				
Connector:	8 x RJ45			
Console	USB-C			
Optical Port:	4 x 1000Base-X SFP			
PoE (Power over Ethernet)				
Standard:	IEEE 802.3at Power over Ethernet Plus			
	IEEE 802.3af Power over Ethernet			
Port:	8 x RJ45			
Power Pin Assignment	4/5(+), 7/8(-)			
PoE Budget:	Up to 240-watt PoE budget			
Environmental				
Operating Temperature:	-40°C to 80°C (-40°F to 176°F)			
Storage Temperature:	-40°C to 85°C (-40°F to 185°F)			
Relative Humidity:	5% to 95% non-condensing			
MTBF	> 200,000 hrs			
Electrical and Mechanical				
Input Power:	12~48V DC(Non-PoE); 48~57V DC(PoE), Redundant Power (6-pin Terminal Block)			
Power Consumption:	8W Max. (PoE in Use<240W)			
Protection:				
Power Input Overload:	Automatic Resettable			
Reverse Polarity:	Present			
DIP Switch				
4-digit DIP switch 	DIP	Function	Settings	
	SW 1	/	/	/
	SW 2	Ring Management	ON - Enabled	OFF - Disabled
	SW 3	/	/	/
	SW 4	/	/	/
LED Indicators:				
PWR	Power Status			
Ethernet (L/A)	Link/Activity			
PoE	PoE Status			
Fiber Status	SFP Port: F9~F12			
Dimensions (WxDxH):	149 x 114 x 50 mm			
Weight:	0.55Kg			
Casing:	Aluminum Case			
Mounting Options:	DIN-Rail mount			
Software Features				

Redundancy Protocols	Support STP/RSTP/MSTP/ERPSv2, Link Aggregation
Multicast Support	Support IGMP Snooping V1/V2/V3，support GMRP, GVMP,802.1Q
VLAN	Support IEEE 802.1Q 4K VLAN，support QINQ, Double VLAN,
Time Management	SNTP
QOS	Flow-based redirection Flow-based rate limiting Flow-based packet filtering 8*Output queues of each port 802.1p/DSCP priority mapping Diff-Serv QoS, Priority Mark/Remark Queue Scheduling Algorithm (SP, WRR, SP+WRR)
ACL	Port-based Issuing ACL ACL based on port and VLAN L2 to L4 packet filtering, matching first 80 bytes message. Provide ACL based on MAC, Destination MAC address, IP Source, Destination IP, IP Protocol Type, TCP/UDP Port, TCP/UDP Port Range, and VLAN, etc
PoE Management	Total power limit of PoE power supply PoE output power allocation PoE output priority configuration PoE working status Scheduling of PoE operation
Diagnostic Maintenance	Support port mirroring, Syslog, Ping
Management Function	Support CLI, WEB, SNMPv1/v2/v3, Telnet server for management, EEE, LLDP, DHCP Server/Client (IPv4/IPv6), Cloud/MQTT
Alarm Management	Support 1 way relay alarm output, RMON, TRAP
Security	Broadcast Storm Protection, HTTPS/SSLv3, AAA & RADIUS, SSH2.0, Support DHCP Snooping, Option 82, 802.1X security access, Support user hierarchical management, ACL access control list, Support DDOS, port-based MAC filtering / binding, MAC black holes, IP source protection, Port isolation, ARP message speed limit
Advance Layer 2+ Features	IPv4/IPv6 Management Static Route
Regulatory Approvals	
ISO9001, CE, RoHS, FCC	

E-link IMC Series L2+ Industrial Ethernet Switch WEB Management User Manual

Scan the QR code