12G-SDI to Fiber Converter with Gigabit Ethernet and 2Ch Backward RS485

Features

- Each SDI channel includes 8-channel audio embedded
- Automatic cable equalization to ensure signal integrity
- Supports ST-2082-1(12G), ST-2081-1(6G), ST-424(3G), ST-292(HD) and ST-259(SD)
- Integrated Reclocker Locks to SMPTE Rates of 11.88Gbps, 5.94Gbps, 2.97Gbps, 1.485Gbps or Divide-by-1.001 Subrates and 270 Mbps
- Directly compatible with 12G/6G/3G-SDI camera systems
- Long transmission capability up to 80 km
- Support 2Ch Backwards RS485
- Supports 1Ch 10/100/1000M Ethernet
- Full digital non-compression broadcast level transmission;
- Super optic dynamic range and free of adjustment;
- Fiber optic WDM/CWDM/DWDM technique;
- Supports 4K*2K(3840*2160@60Hz),1080P,1080I,720P.



Overview

LNK-12GSDI-1V2R1GE Series 12G-SDI Fiber Converter supports 1Ch 12G Video (audio embedded) &1Ch Gigabit Ethernet&2Ch Backward RS485 transmitted via fiber optical cable, and monitor the signal locally over a 12G loop output. 12G Video over Fiber Converters includes one transmitter and one receiver for HDTV 4K*2K(3840*2160@60Hz), 1080P，1080I, 720P.

Application

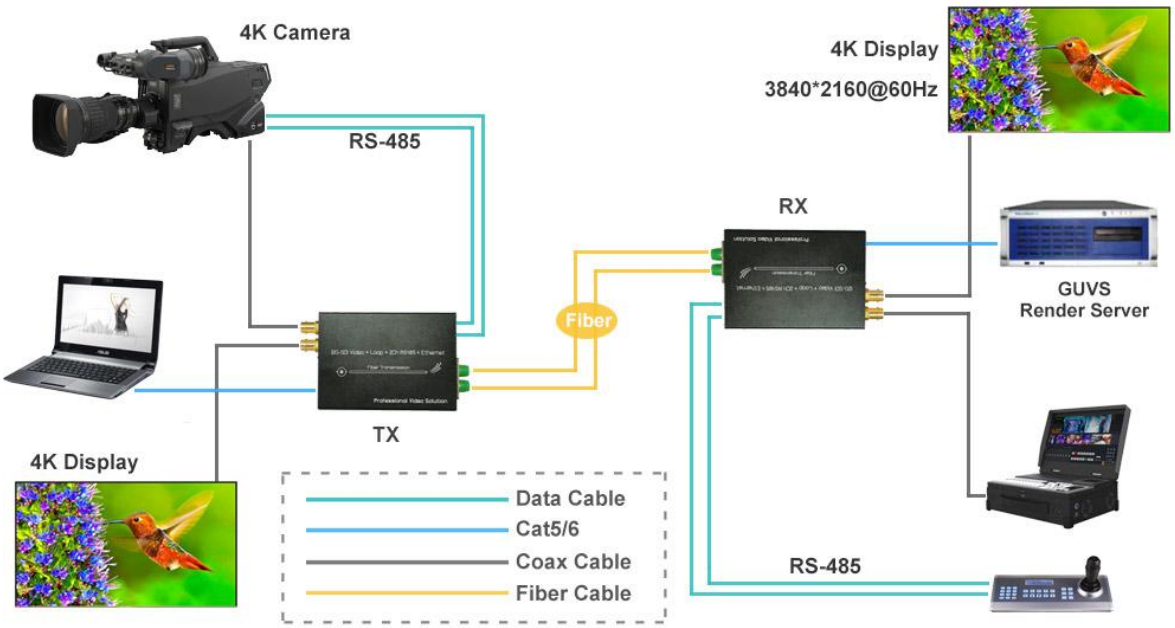

Technical Indexes

Formats	Supports ST-2082-1(12G), ST-2081-1(6G), ST-424(3G), ST-292(HD) And ST-259(SD)
Compatible	Compatible With DVB-ASI and AES10 (MADI)
Input	1 x 12G-SDI on BNC
Output	2 x FC optical fiber
	1 x 12G-SDI loop-out on BNC
Supported Resolution	HDTV 4K*2K, 1080P, 1080I, 720P
Resolution range	3840*2160@60Hz
Input cable specification	≤70m@12G SDI Belden 1694A
Output cable specification	≤60m@12G SDI Belden 1694A
Ethernet	10/100/1000Mbps
Data type	2Ch Backward RS485
Optical transmission bandwidth	270MHz～12GHz
Power	12 VDC
Power Consumption	6 W (Max.)
Dimensions (LxWxH)	117 x 80 x 24 (mm)
Operating Temperature	-10℃～70℃
Storage Temperature	-40℃～85℃

Panel

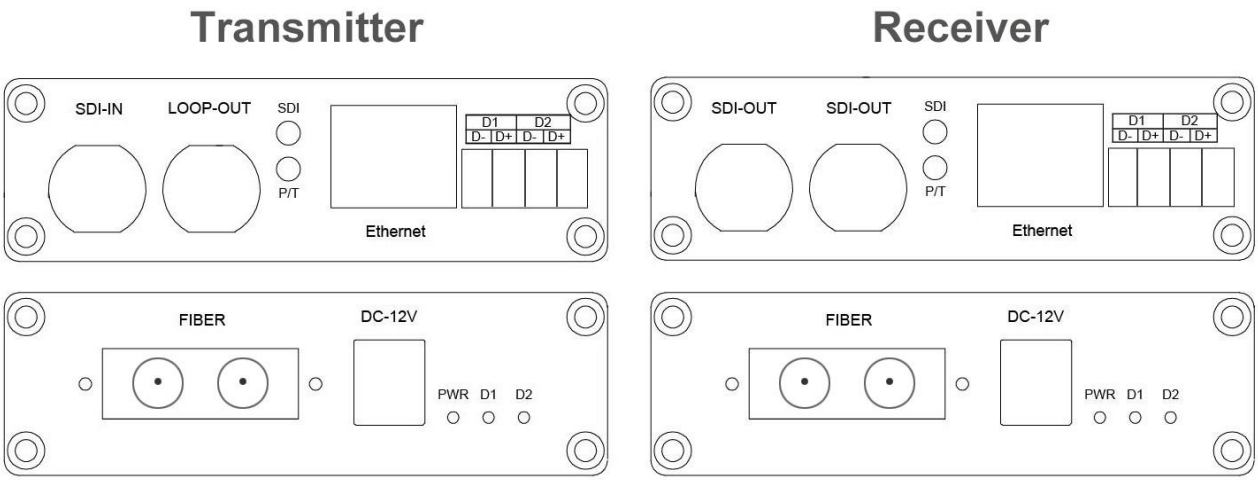

RS485 Connection:

Pin	-	+
RS485	D-	D+