LNK-IMC1200GP-SFP

Mini Industrial 100/1000Base-X SFP to 2x10/100/1000Base-T 30W PoE+ Media Converter

This quick start guide describes how to install and use the Hardened SFP Media Converter with High Power PoE. This is the Media Converter of choice for harsh environments constrained by space.

Overview

LNK-IMC1200GP-SFP is a DIN rail type media converter that supports external SFP modules and meets EN55022 standard. The Ethernet port support high power PoE (Power Sourcing Equipment) which complies with IEEE 802.3af/at standard. It is a hardened grade product whose operating temperature range is -40℃ to 75℃. **LNK-IMC1200GP-SFP** supports 2x10/100/1000Base-T with 30W PoE+ and 100/1000Base-X Dual Rate SFP Port. The Ethernet port supports both half-duplex and full-duplex mode. **LNK-IMC1200GP-SFP** is the same at the transmitter or receiver sides. Users can use 100/1000Mbps Dual Rate SFP modules (single-mode/multi-mode fiber, 1/2 core) as needed.

General

To ensure trouble free transportation and storage, all products must be thoroughly inspected, tested and properly packed before delivery. Check the product upon receipt for any visible damage which may have been caused during shipment.

Package Content

- **LNK-IMC1200GP-SFP** Media Converter x 1
- Quick Start Guide x 1
- L-shaped wall mount bracket x 1

Physical Description

Front Panel

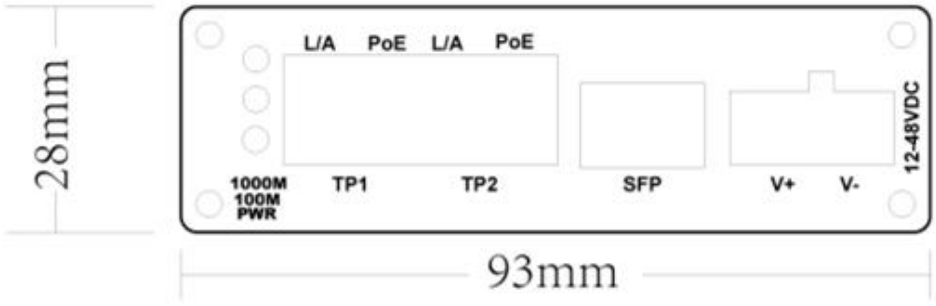

Rear Panel

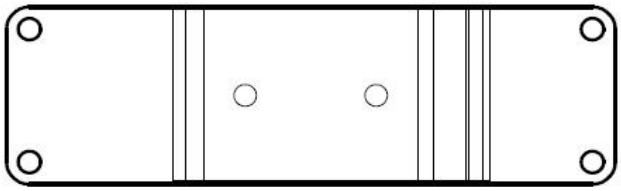

Installation

SFP Transceiver Module

You can select different SFP modules as required (Please refer to our SFP selection list for the appropriate module).
To insert/remove the SFP, the procedures are as follow:

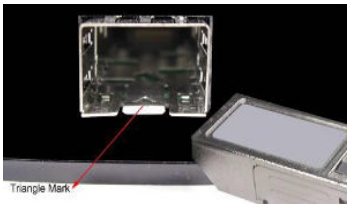



1. On the side panel, insert the SFP module into the SFP port until it is securely locked.

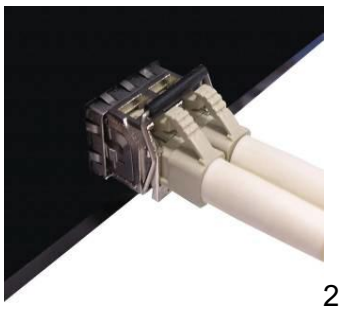

2. Connect the optical fiber (1/2 core) to the LC connector(s) of the SFP.

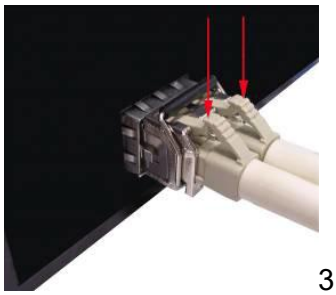

3. To remove the SFP module, press down the lock of the LC connector of the optical fiber to pull out the fiber cable.



4. Pull down the SFP lever and hold its position. Pull out the SFP module from the SFP port.

DIN Rail Installation

LNK-IMC1200GP-SFP can be installed on a DIN rail. Installation steps are as follows:

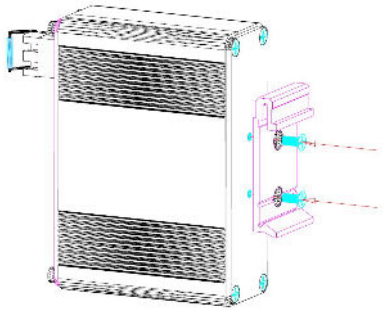

1. Tighten the screws to fix the DIN Rail plate

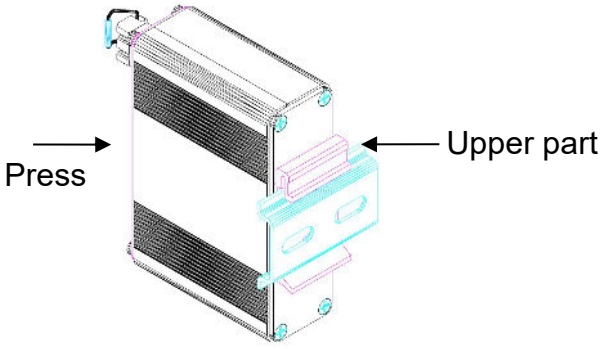

2. Lock the upper part of the DIN rail clip on the upper side of the track. Gently press it until the clip is securely locked on the track.

Wall Mount Installation

LNK-IMC1200GP-SFP can also be installed on a wall or a flat surface. Installation steps are as follows:

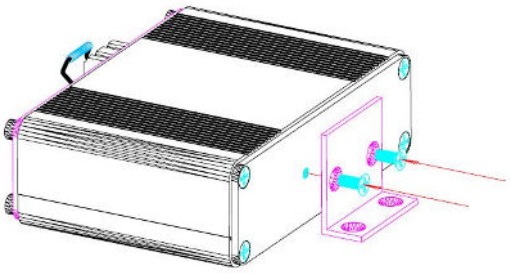

1. Tighten the screws to fix the wall mount bracket

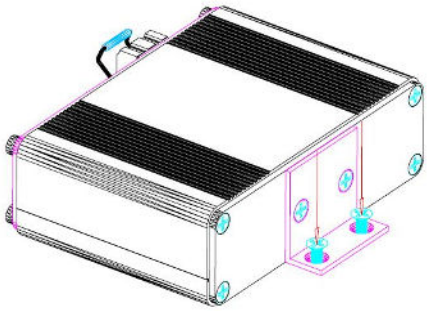

2. Mount the switch on the wall or on a flat surface with 2 screws piercing through the mounting holes to secure it in position.

Setup

a) Connect the Ethernet port of the media converter to a PoE IP camera (PoE device) or network device with a network cable.

b) Insert the appropriate SFP into the SFP port. Connect the fiber cable from the device (media converter or switch) on the other end to the LC connector of the SFP.

c) After the device is powered on, the PWR indicator will all be on. If the indicators are not on, check the power supply connection.

d) After all cables are correctly connected, the indicators will be lit as per port status LEDs (page 4).

Interface

Ethernet Port

RJ-45 Pin Assignment

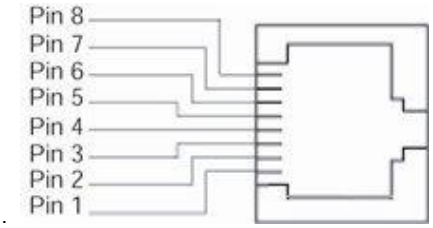

Pin	LNK-IMC1200GP-SFP Signal Definition
1	TD+
2	TD-
3	RD +
4	Positive (VCC+)
5	Positive (VCC+)
6	RD-
7	Negative (VCC-)
8	Negative (VCC-)

Power Connection



V+ V-

12~48VDC	V-	GND	Terminal Block
	V+	12~48V	

The Port Status LEDs, dimension drawing

LED	State	Indication
PWR	Green	Power on.
	Off	Power off.
100 (SFP)	Green	A valid 100M fiber connection established
1000 (SFP)	Green	A valid 1000M fiber connection established
PoE	Green	PoE is activated.
	Flashing	A Power Device (PD) is being detected.
	Off	No device is connected or the connected device is not a PD.
L/A (RJ45)	Steady	A valid network connection established
	Flashing	Transmitting or receiving data. ACT Stands for Activity.

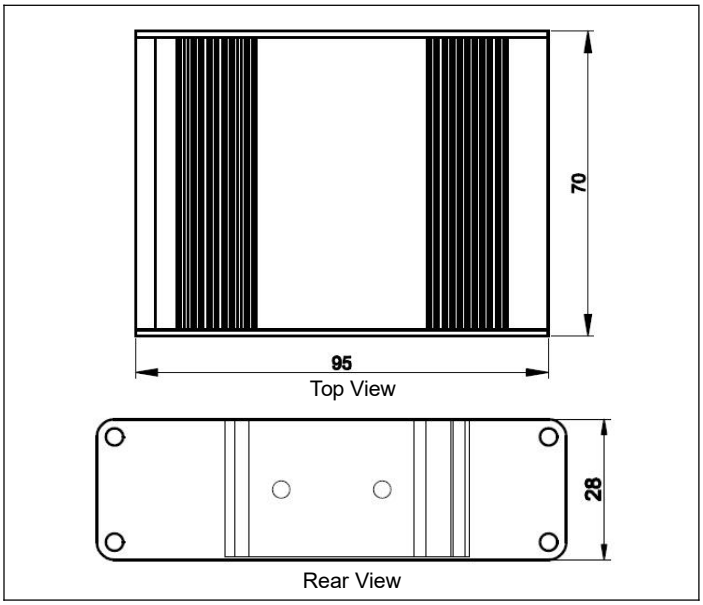

Functional Description

- Converts 2x10/100/100Base-TX to 100/1000Base-X SFP
- Supports IEEE802.3at Power over Ethernet (POE+)
- Supports Full/Half duplex
- Supports External SFP
- Supports Auto-MDI/MDIX
- Support DIN-Rail and Wall-mount installation
- Extensive LED indicators for network diagnostics
- Environmentally hardened -40℃ to 75℃ (-40℉ to 167℉) operating temperature.